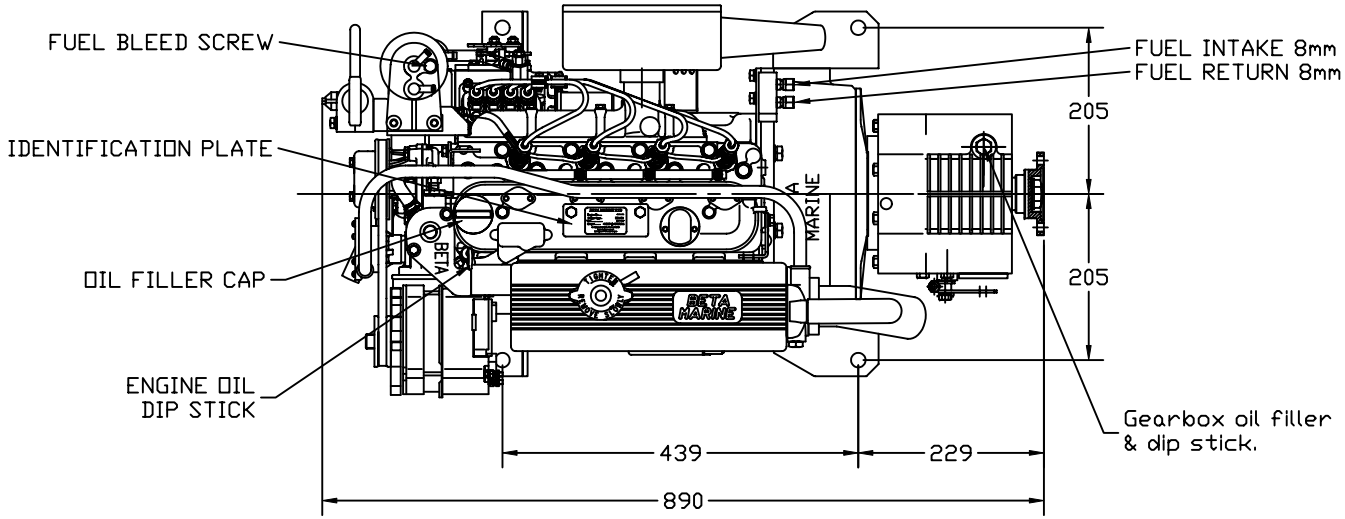

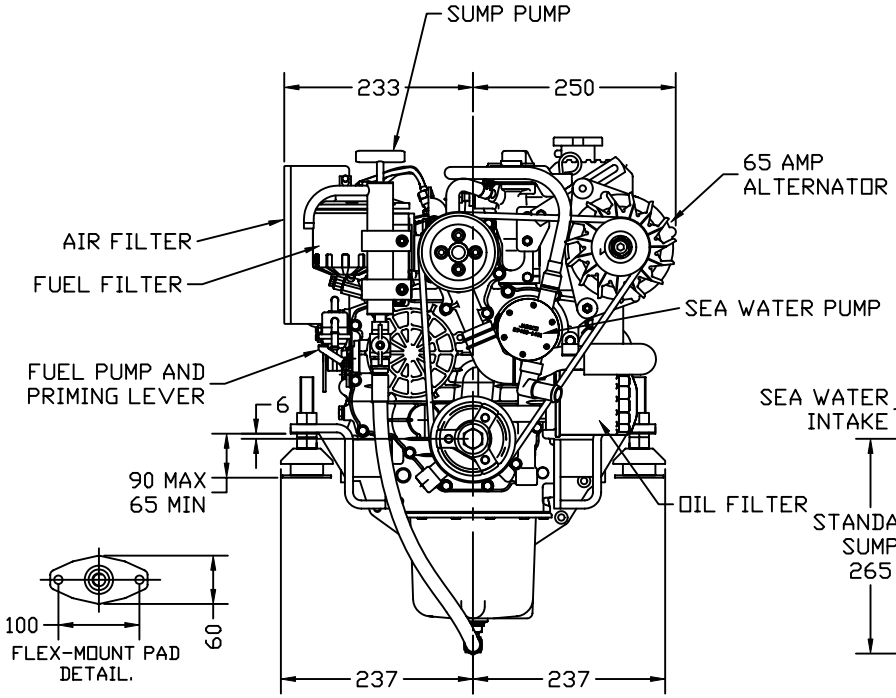

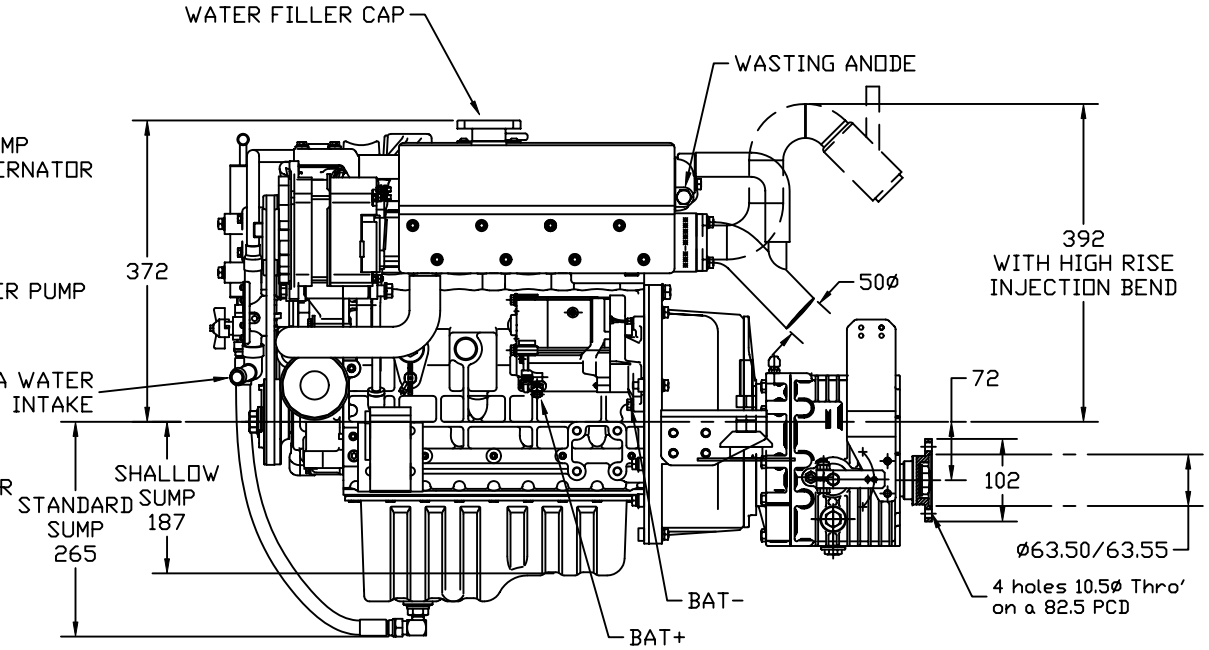

REV	DESCRIPTION	DATE	APP'D	DRAWN
01	SHALLOW SUMP DIM ADDED	13/09/00	LT	DM
02	REDRAWN	26/08/03	LT	TW
03	SHOWN HIGH RISE INJECTION BEND	02/10/05	LT	TW
04	NAME	28/11/05		TW

NOTES

DIMENSIONS IN MM (INCH) DO NOT SCALE

TITLE

BV1305 & BV1505 HEAT EXCHANGE WITH PRM120 GEARBOX AND 65 AMP ALTERNATOR

BETA MARINE

BETA MARINE LTD, MERRETTS MILLS, BATH ROAD, SOUTH WOODCHESTER, STROUD, GLOS. GL5 5EU

TEL: (01453) 835282 FAX: (01453) 835284

DRAWN BY:- TW

CHECKED BY:- LT

SIZE A4 | DWG NO. 100-98915 | REV 04

SCALE NTS | PAGE 1 of 1 | DATE 05/12/03